STÖPREGN

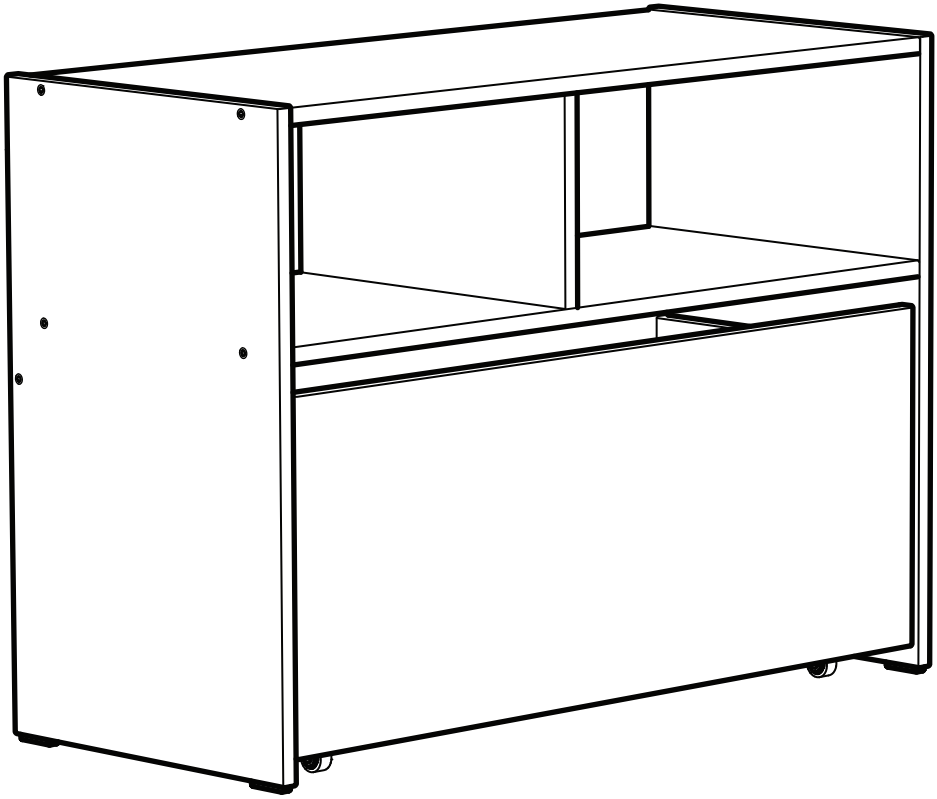

Design and Quality
IKEA of Sweden

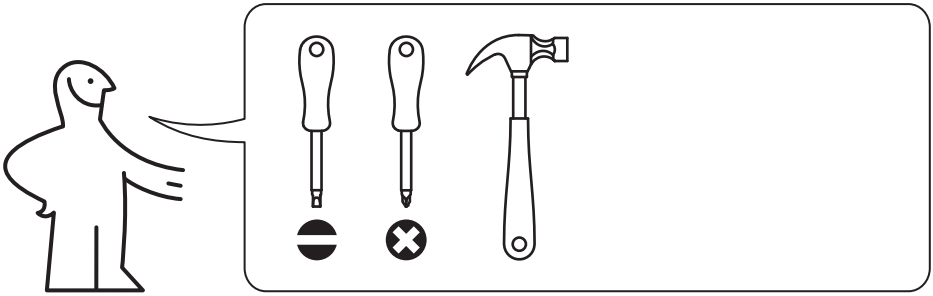

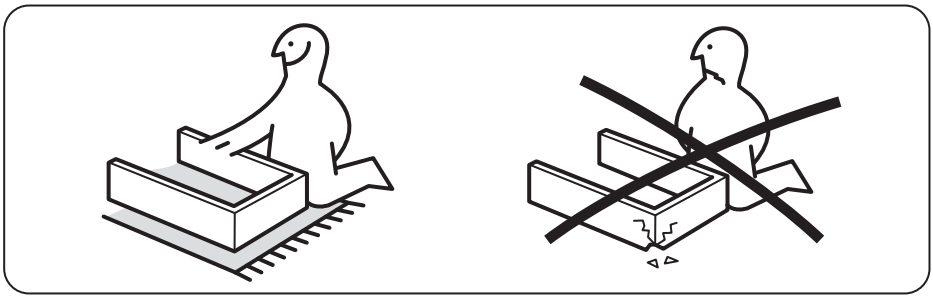

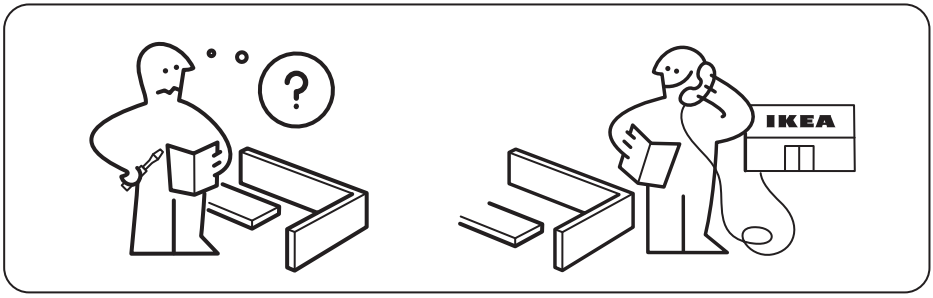
?
IKEA

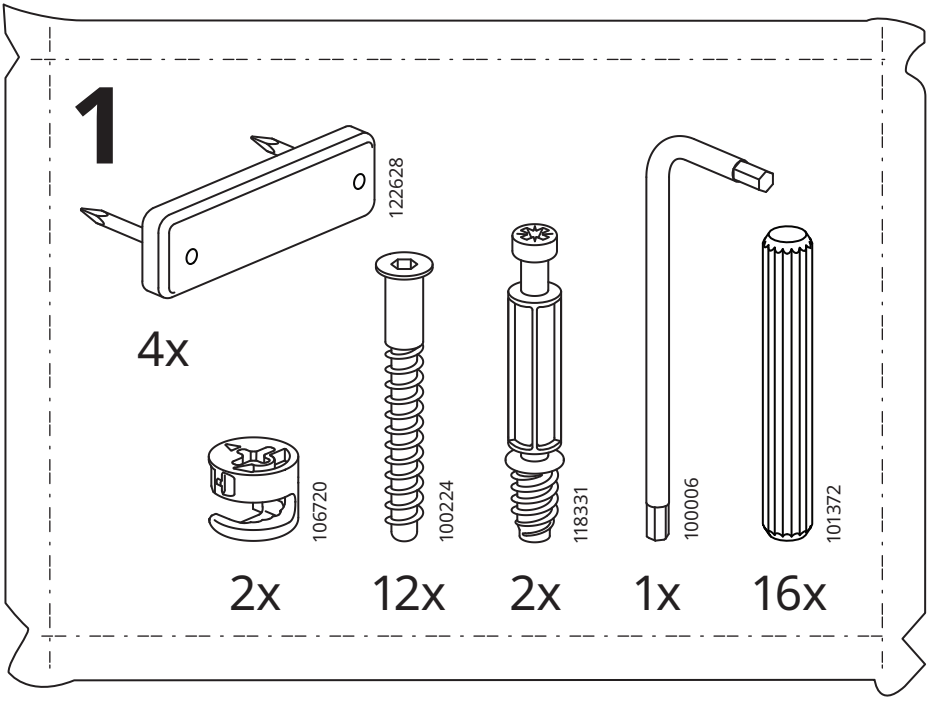
1
122628
4x
106720
100224
118331
100006
101372
2x
12x
2x
1x
16x

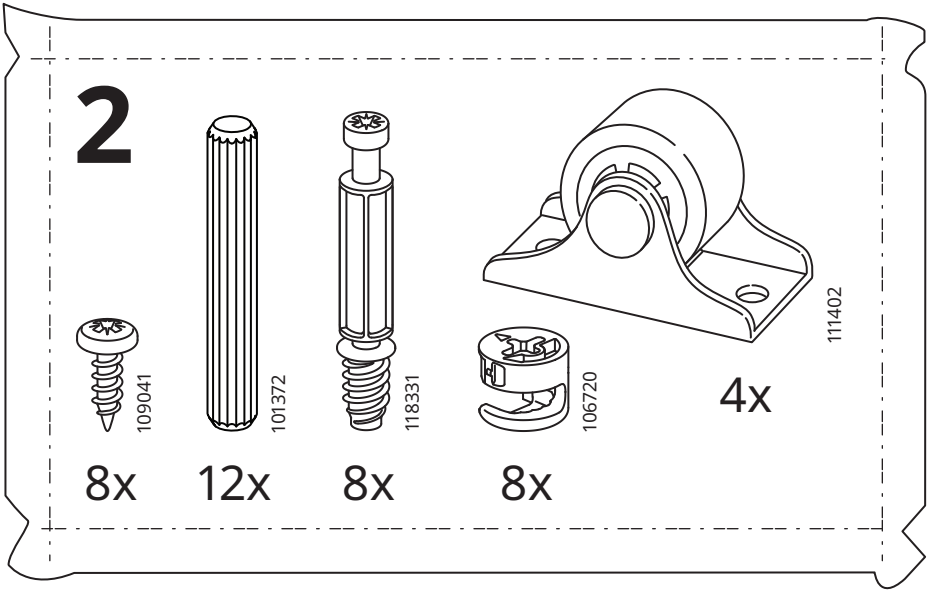
2
109041
101372
118331
111402
106720
4x
8x
12x
8x
8x

1



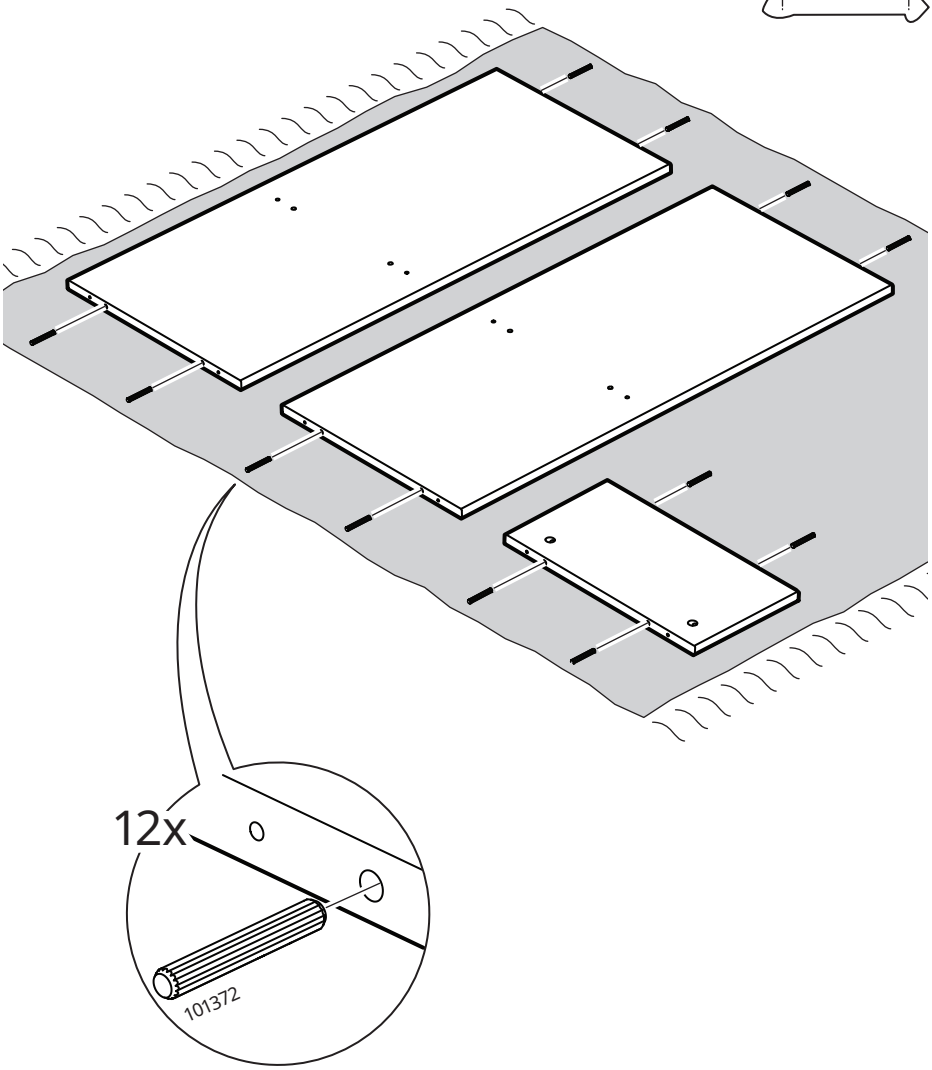

2

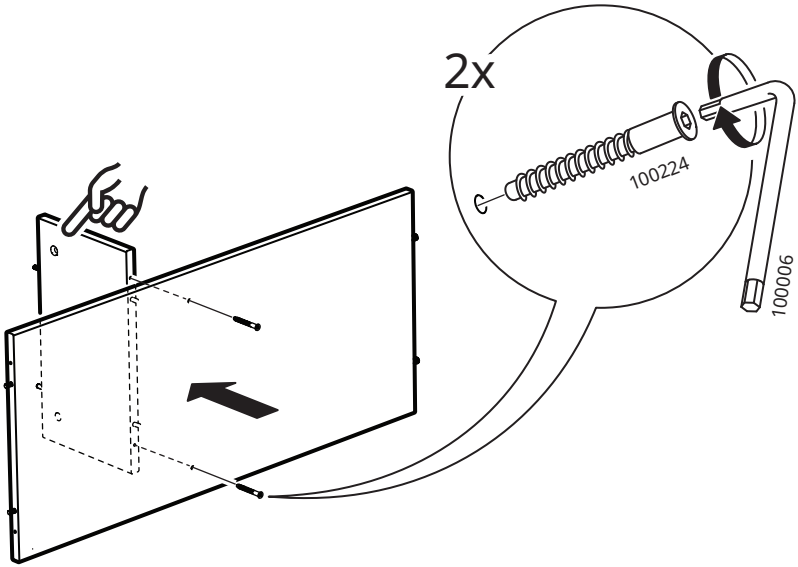

3

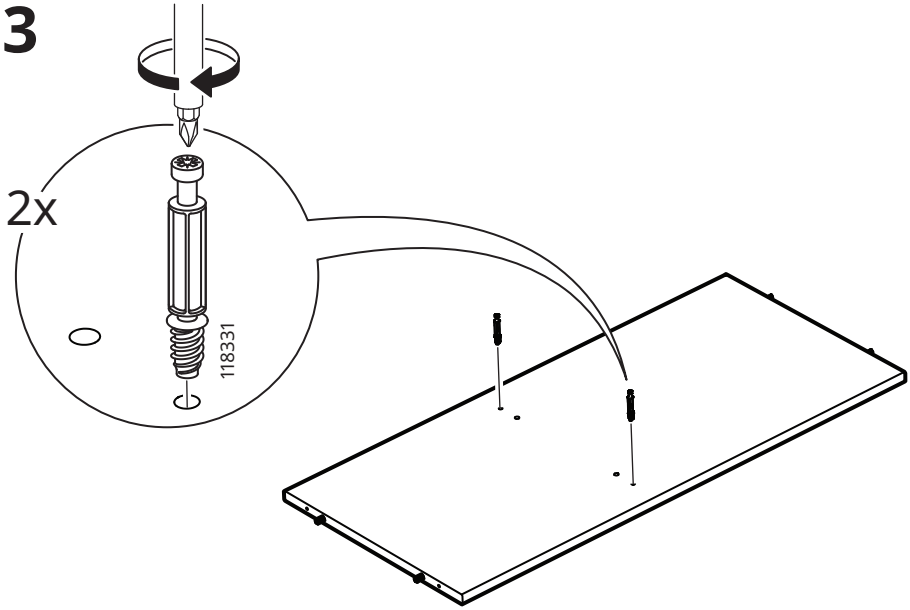

4

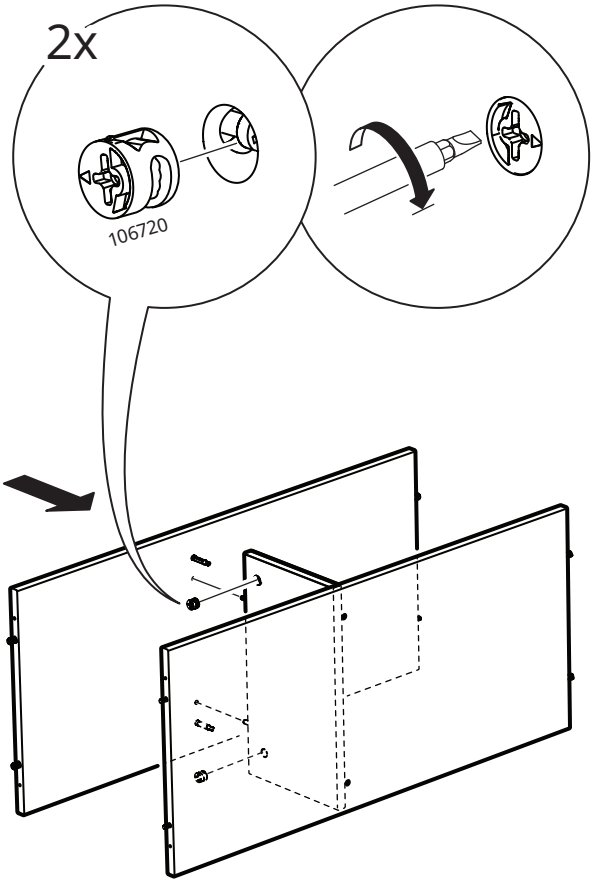

5

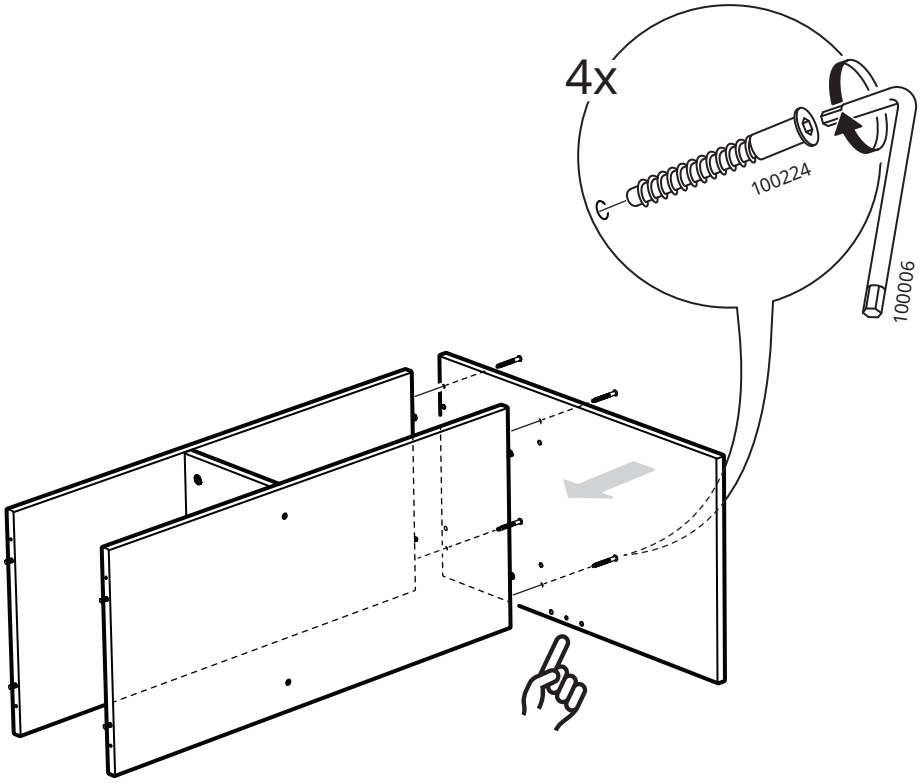

6

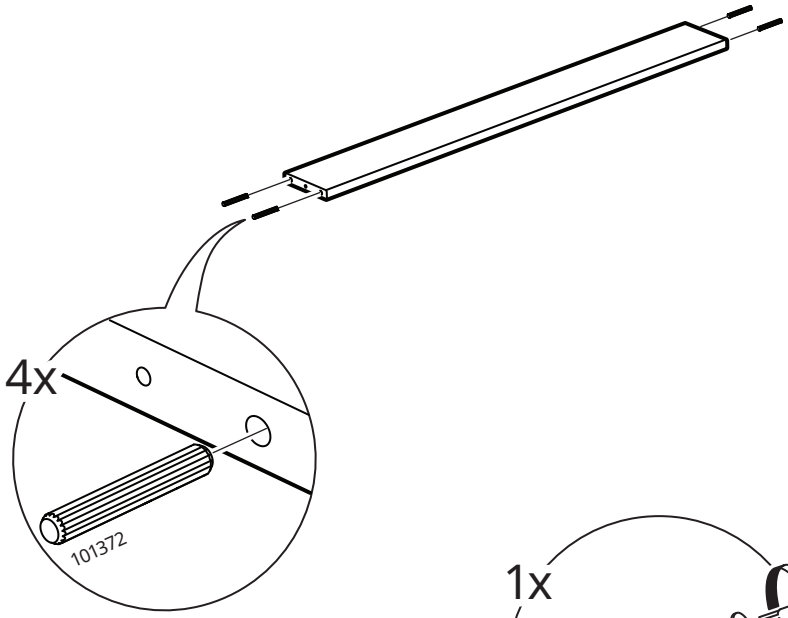

7

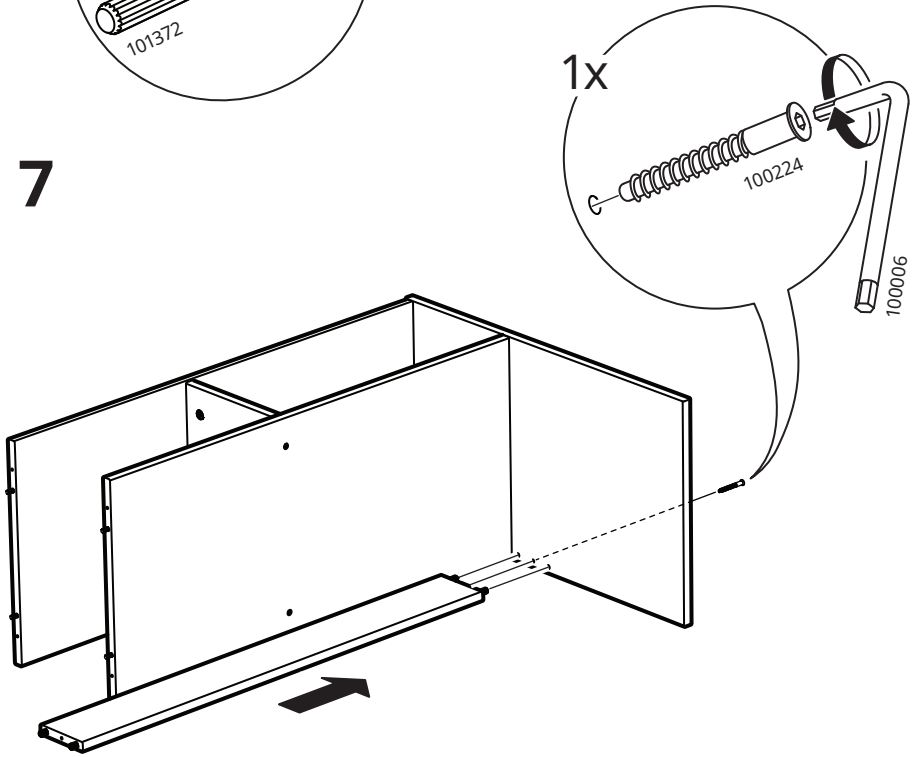

8

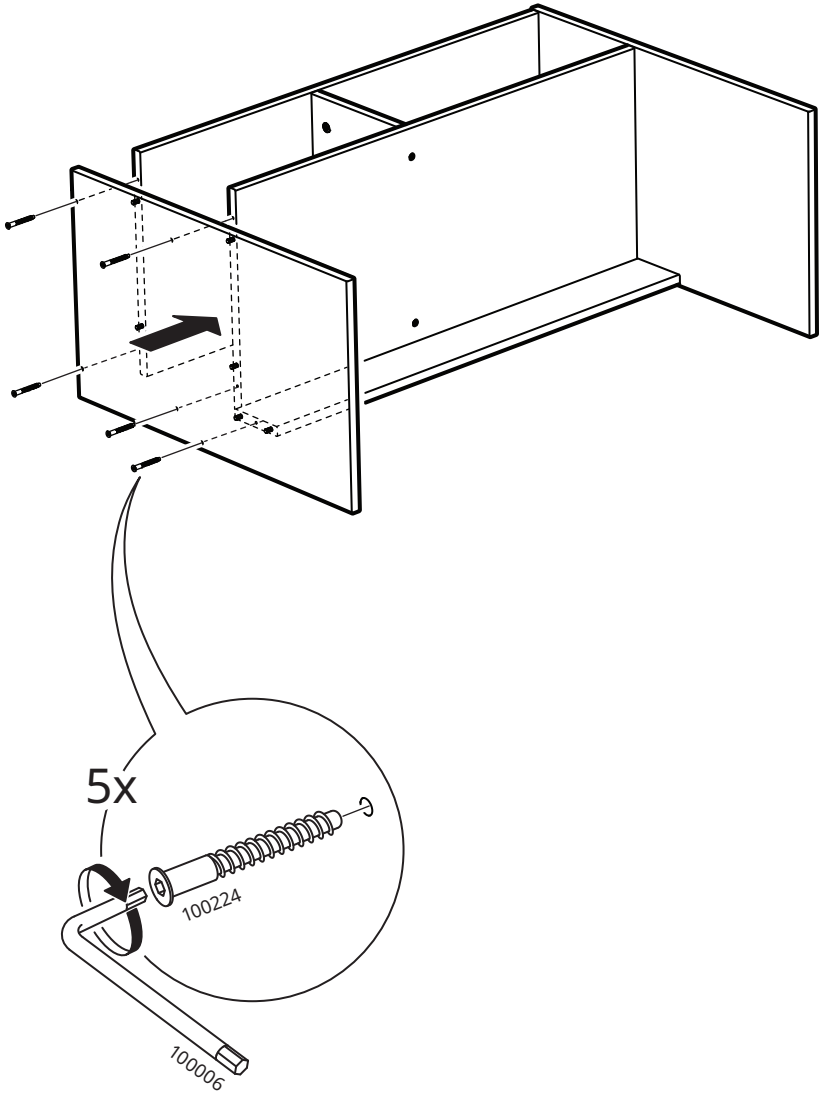

9

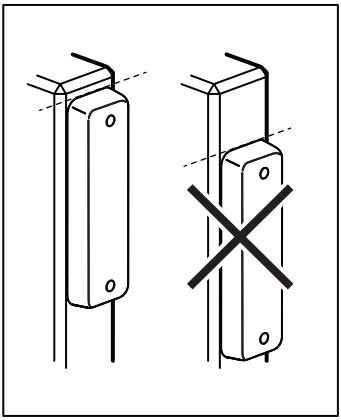

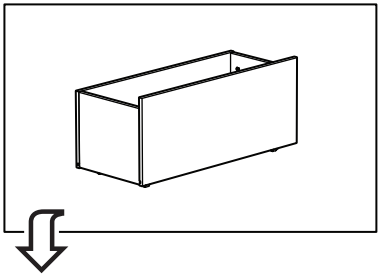



10

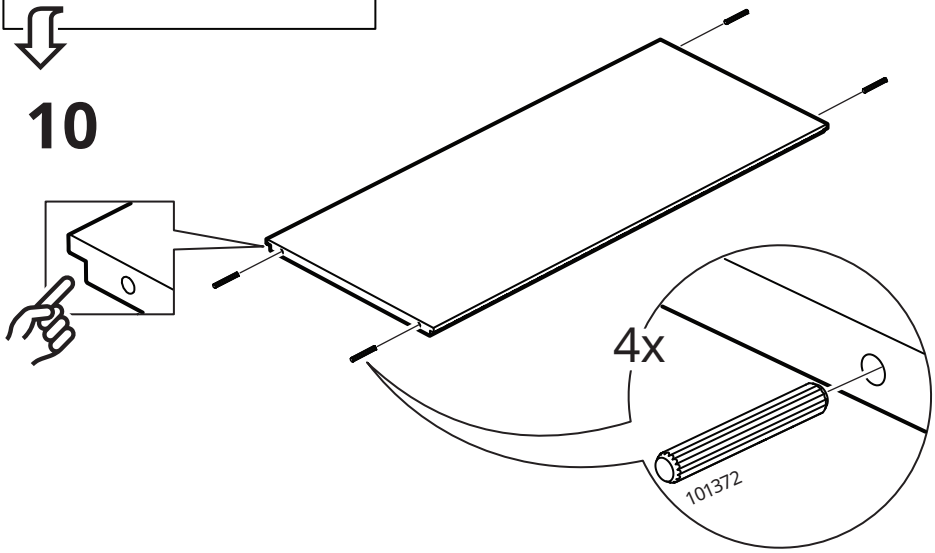

11

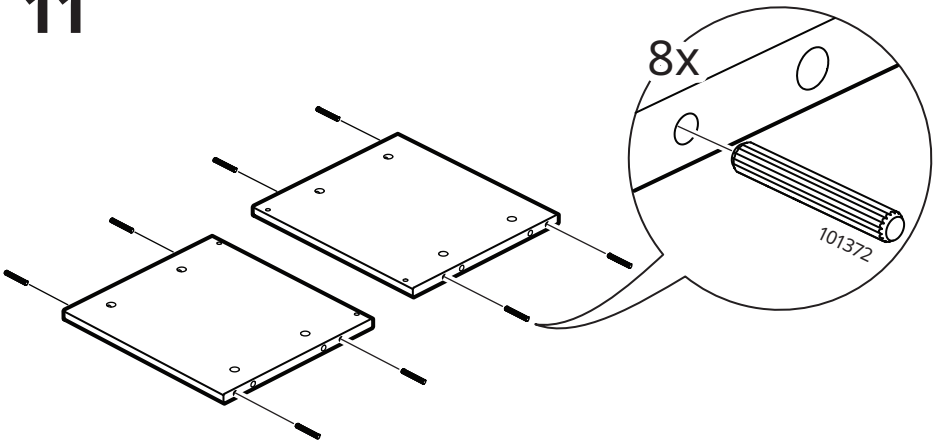

12

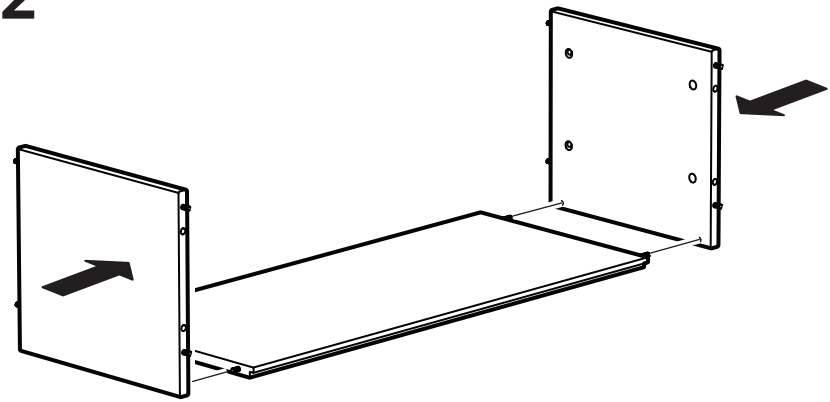

13

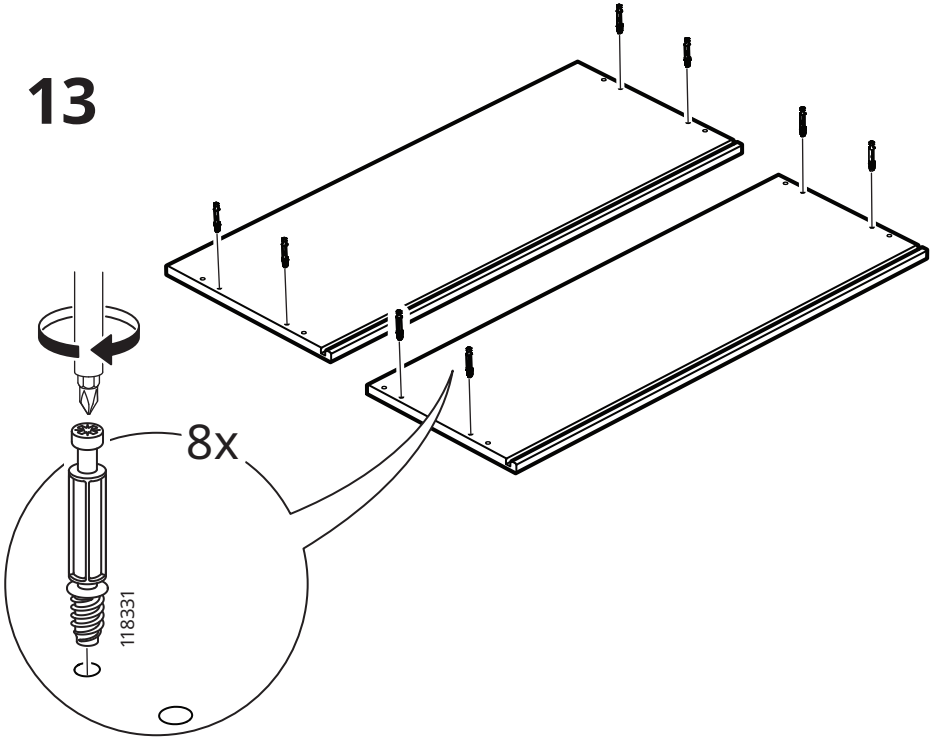

14

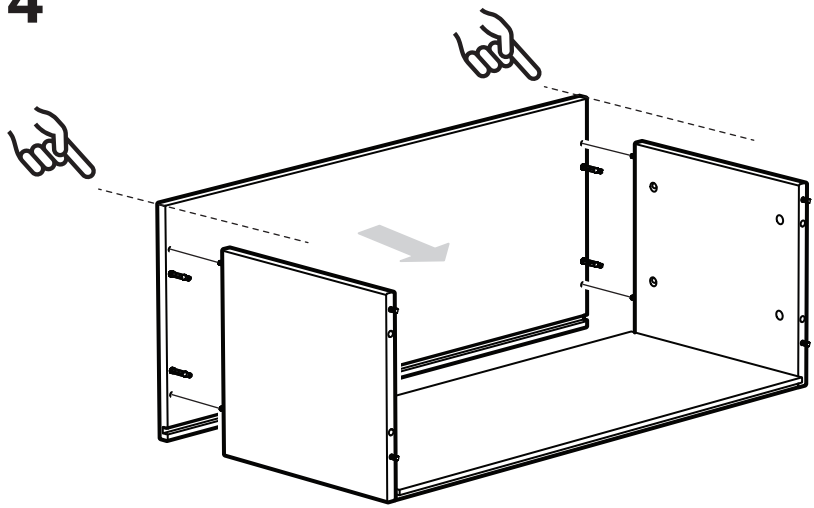

15

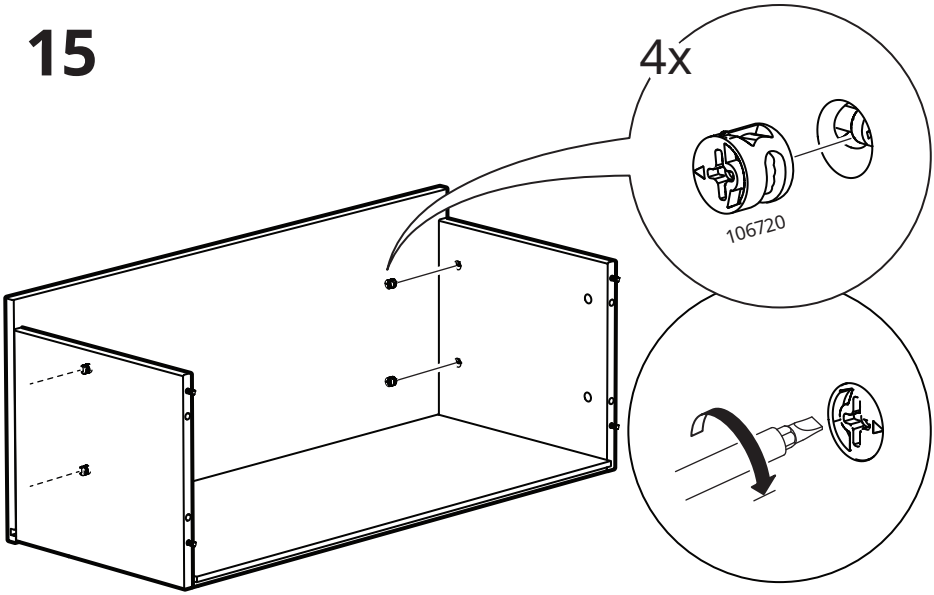

16

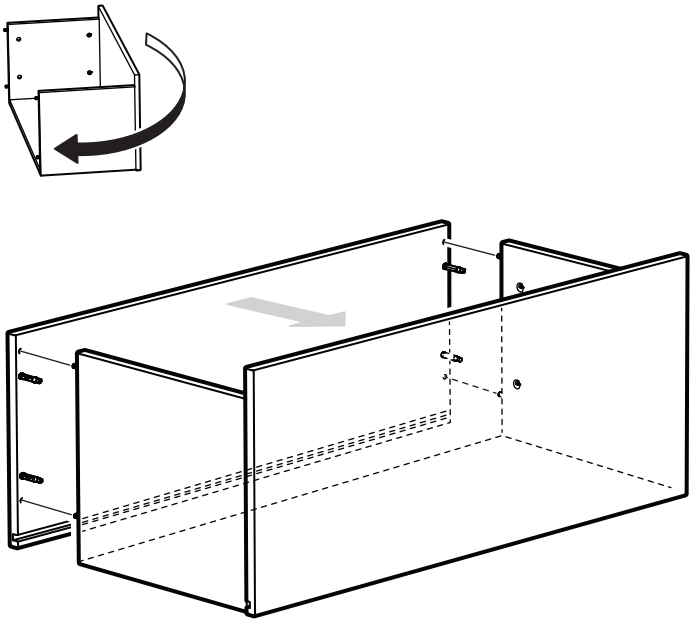

17

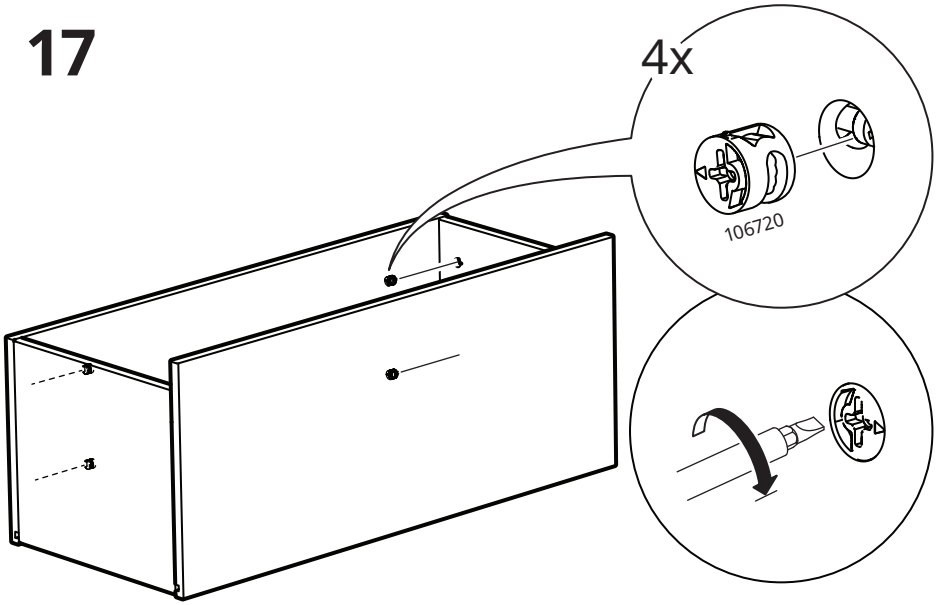

18

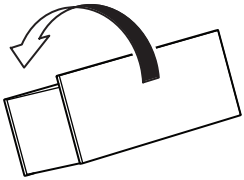

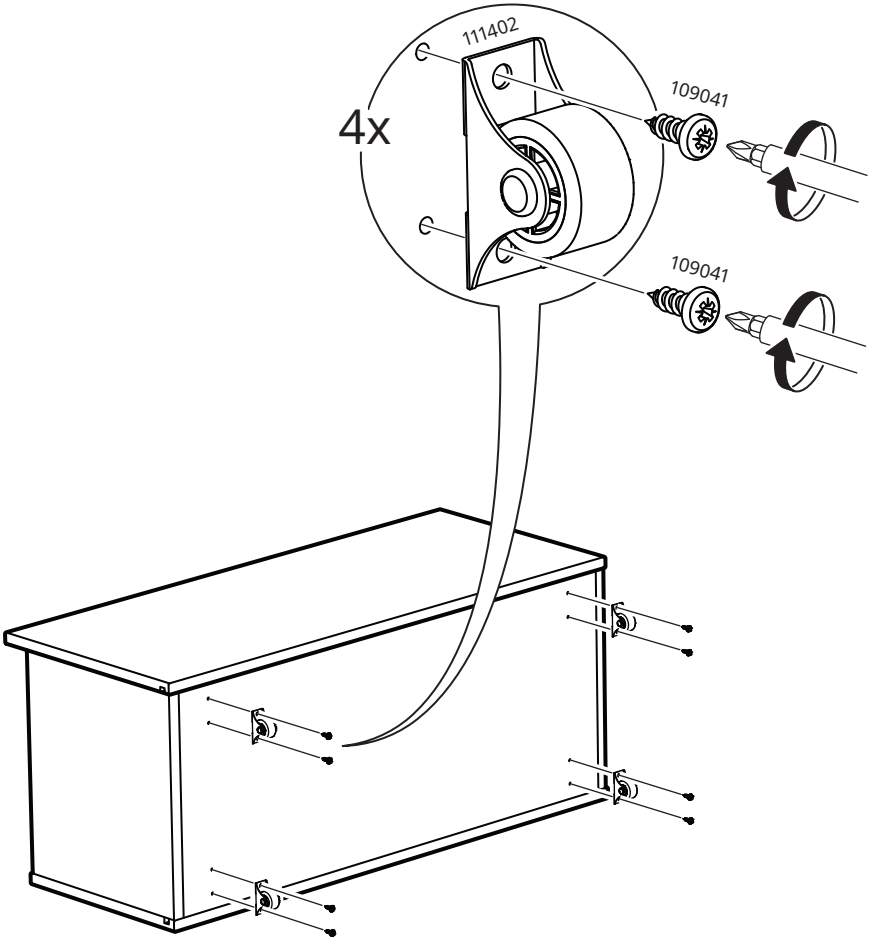

19

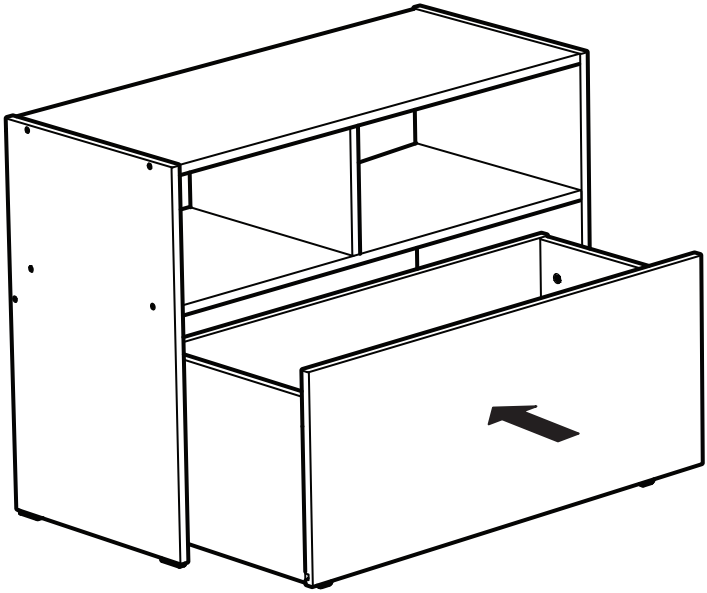

© Inter IKEA Systems B.V. 2025