LERVIKÖN

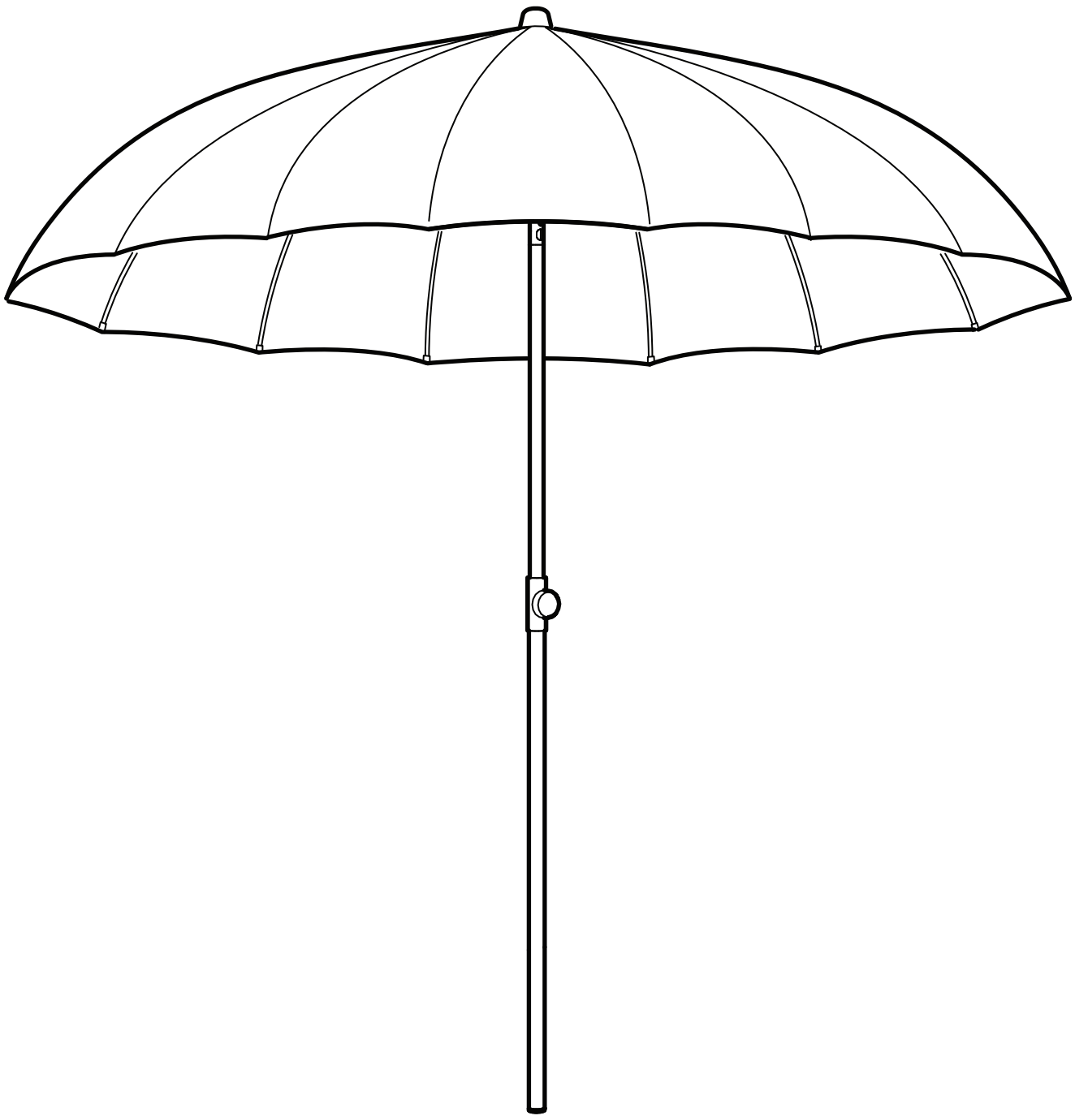

Design and Quality
IKEA of Sweden

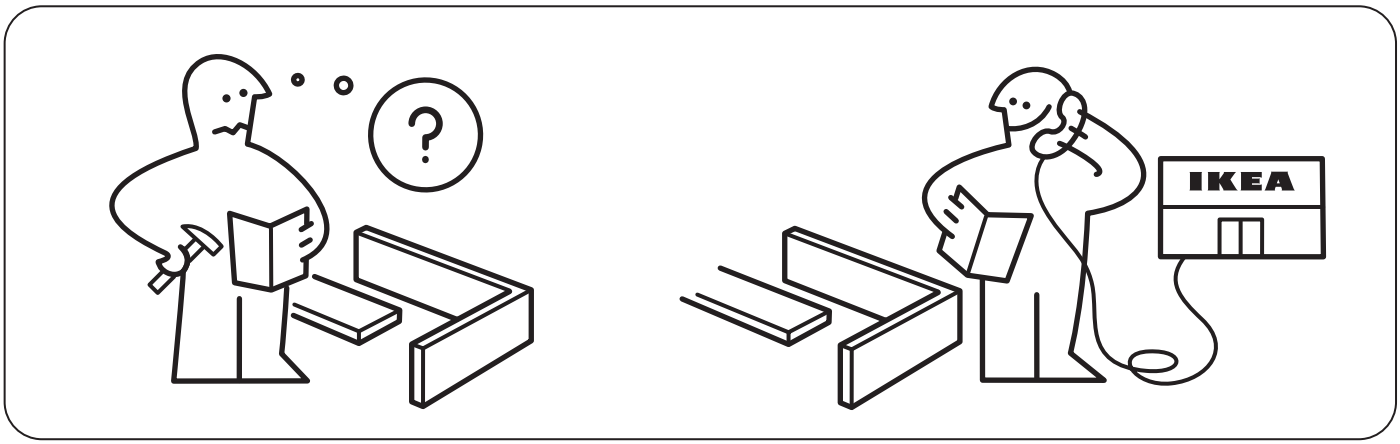

1

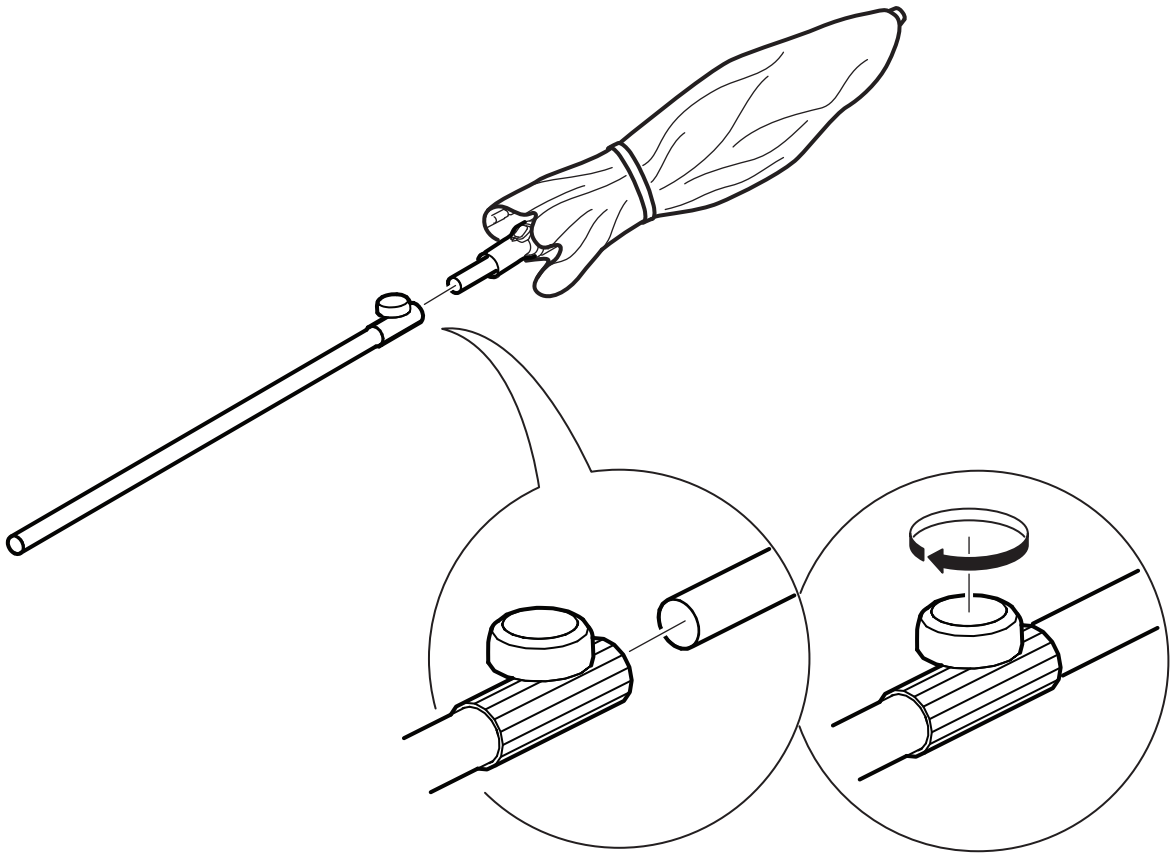

2

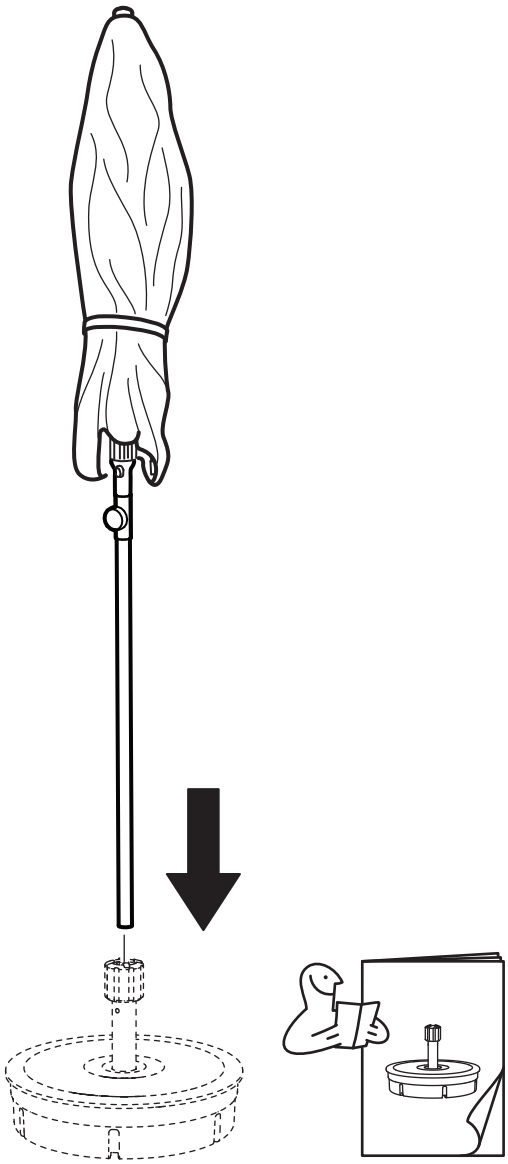

3

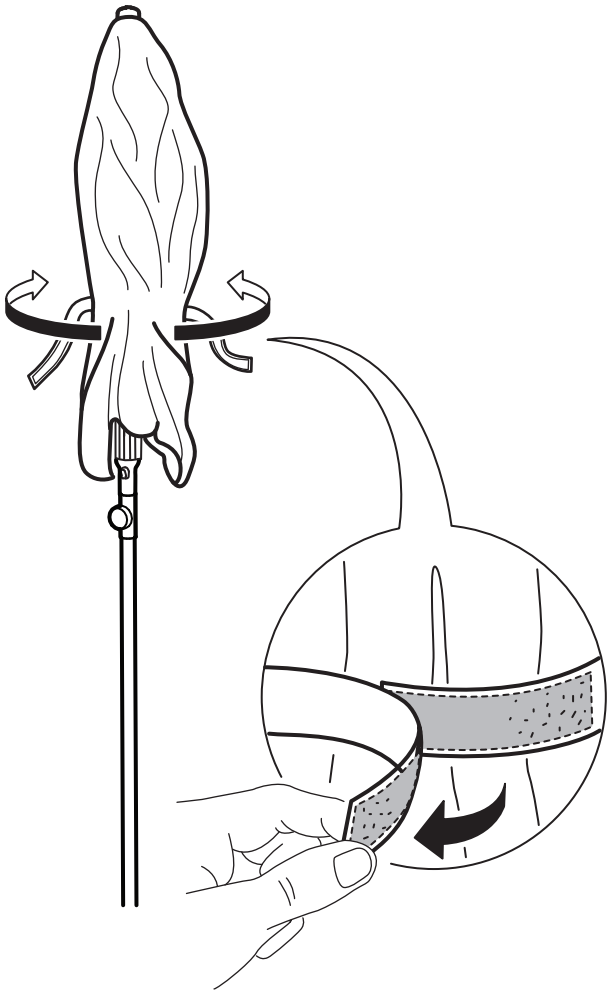

4

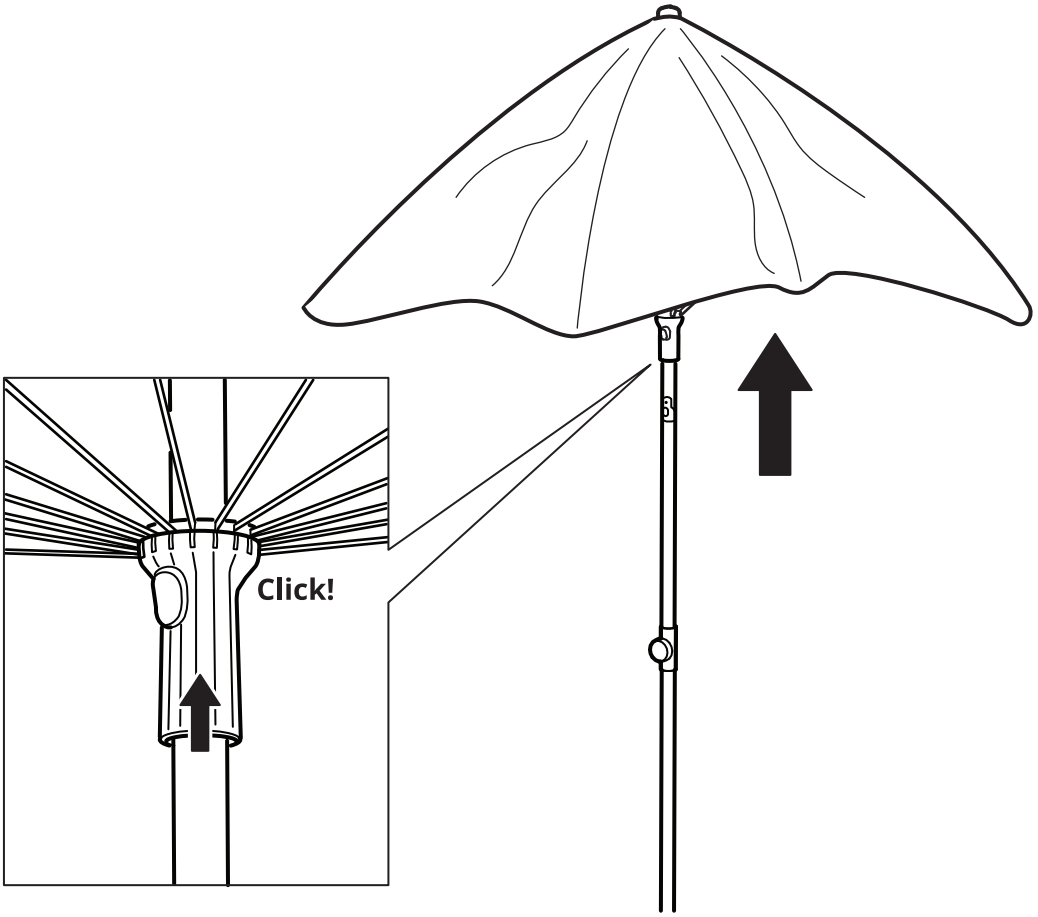

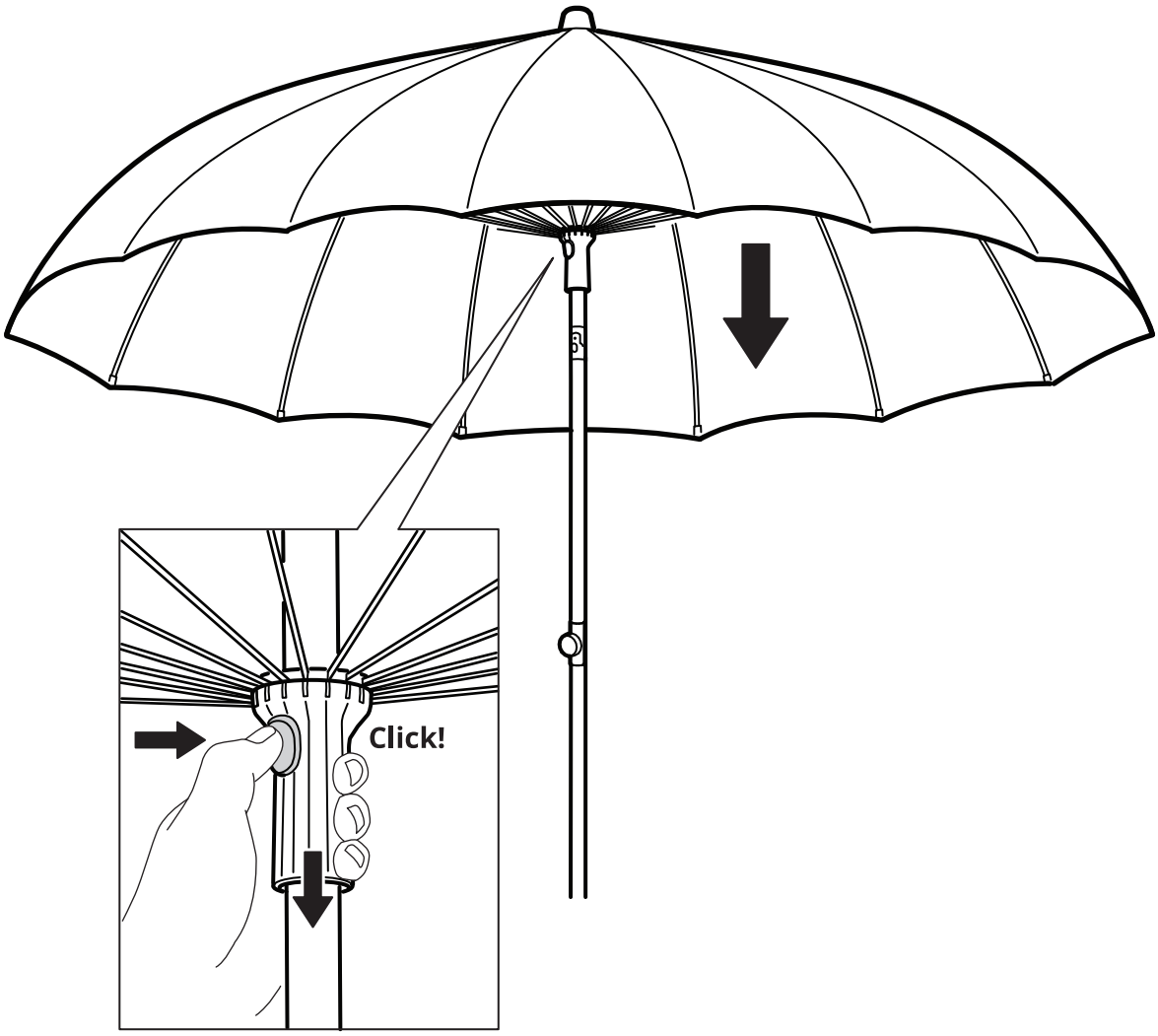
Click!

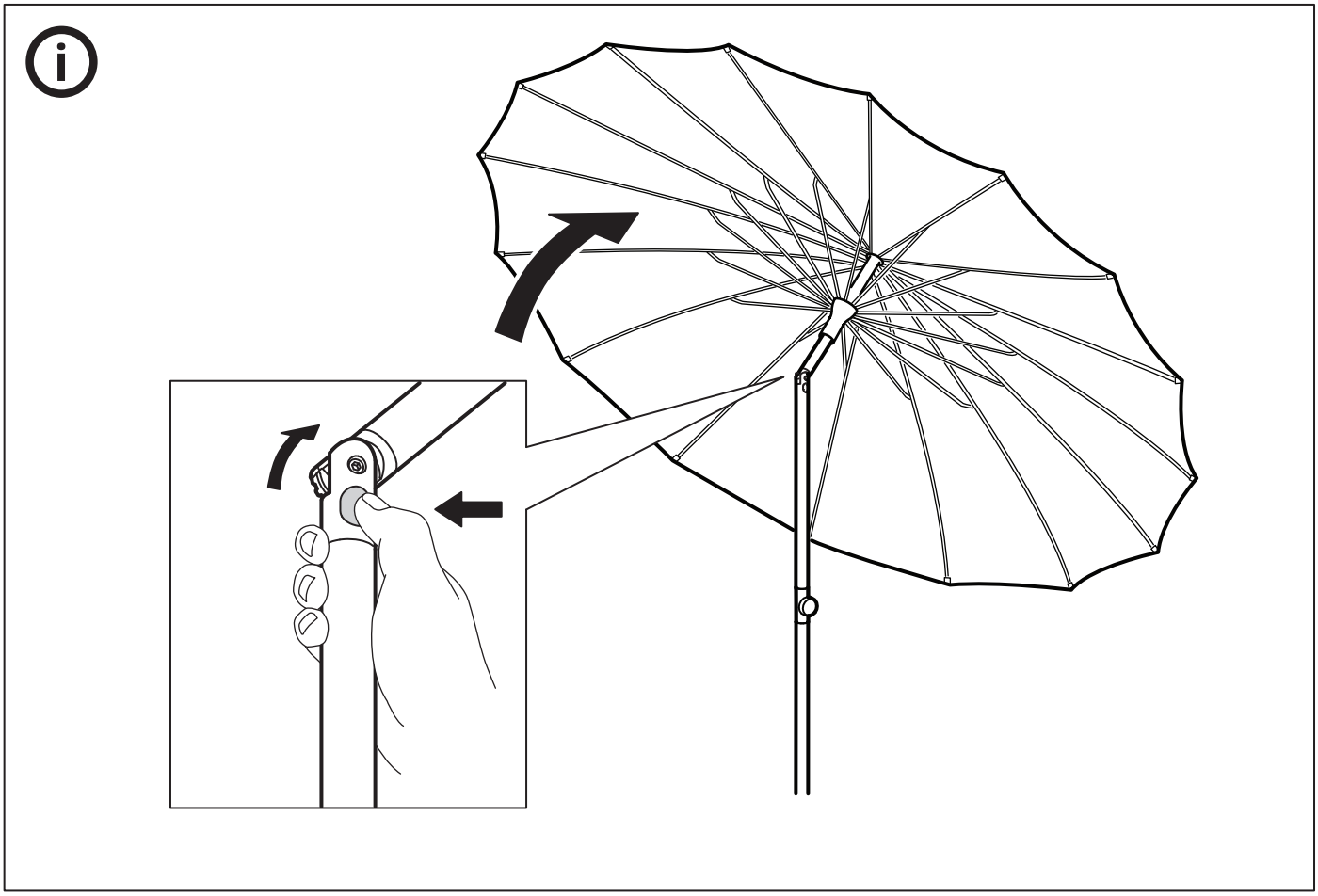

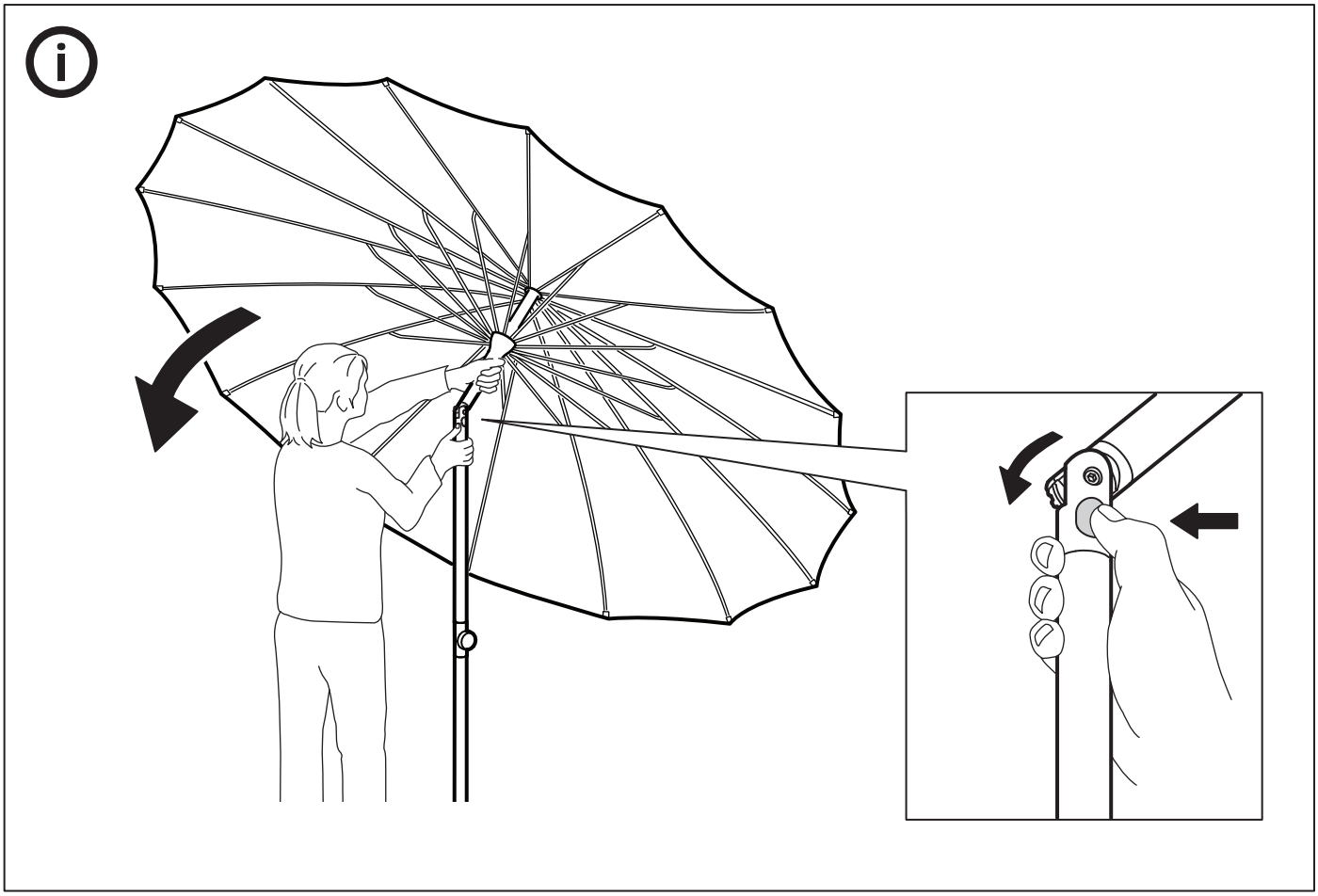

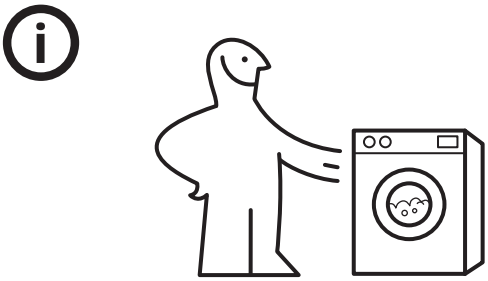

1

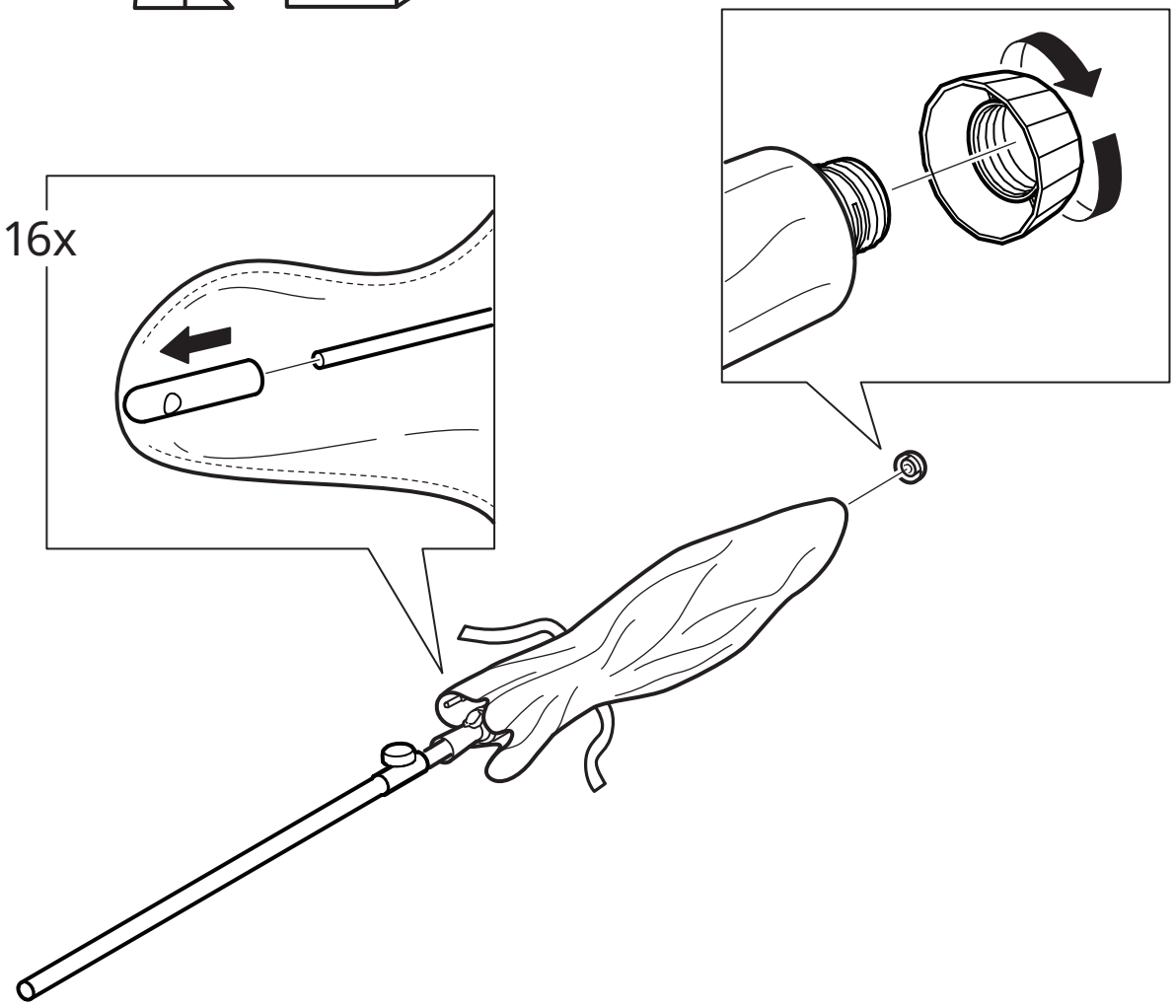

2

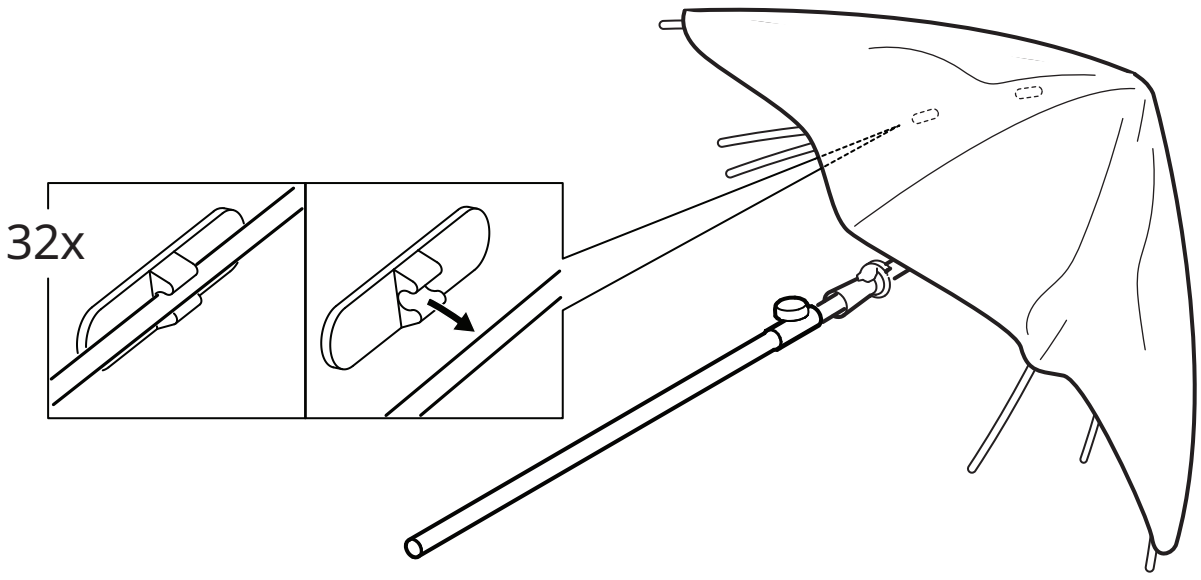

© Inter IKEA Systems B.V. 2025
2026-04-21 AA-2690712-2